# SL1 Series Super Limit Switches

## FEATURES

Mechanical Life of 20 Million Operations, High Sealability and Highly Robust Long-life and Maintenance-free Compact Horizontal Type Limit Switches.

- *EN standard approval acquired. (TÜV, CE marking)*
- *Mechanical life exceeds 20 million operations owing to a 2-piece spring mechanism.*
- *High sensitivity. (M.D. = 0.1mm)*
- *High sealability, Oil-resistant/immersion-proof type (JIS) and IP67 (IEC). An O-ring seal and an integral diaphragm seal are built in.*
- *Small, space-saving and tightly gang mounting is possible.*
- *UL/CSA conformed.*

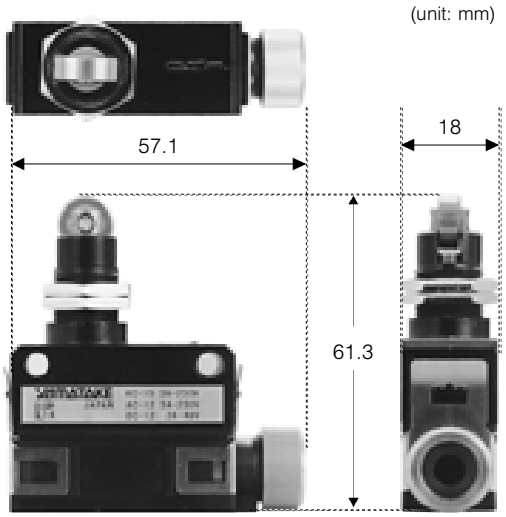


The photograph shows a roller plunger type.
Confirm the detail dimensions by drawings.

## ORDER GUIDE (basic catalog listing)

● Without cord

| Actuator | | Basic catalog listing | Options | | | |
|---|---|---|---|---|---|---|
| Name | Shape | | Low current load type<br>**K** | Cold and weather resistant type<br>**L** | Cold and weather resistant type + low current load type<br>**KL** | High temperature and high oil resistance Note 1<br>**V** |
| Roller plunger type |  | **SL1-A** | **SL1-AK** | **SL1-AL** | **SL1-AKL** | **SL1-AV** |
| Boot seal roller plunger type |  | **SL1-B** | **SL1-BK** | **SL1-BL** | **–** | **SL1-BV** |
| Cross roller plunger type |  | **SL1-D** | **SL1-DK** | **SL1-DL** | **SL1-DKL** | **SL1-DV** |
| Long roller plunger type |  | **SL1-E** | **SL1-EK** | **SL1-EL** | **–** | **SL1-EV** |
| Plunger type |  | **SL1-H** | **SL1-HK** | **SL1-HL** | **SL1-HKL** | **SL1-HV** |
| Short roller lever type |  | **SL1-P** | **SL1-PK** | **SL1-PL** | **SL1-PKL** | **SL1-PV** |

Note 1: UL/CSA/EN standards are not applied.
Note 2: Use with **SL1-PA12**.

## EXTERNAL STANDARDS

| | Approving body | Standard name | File No. |
|---|---|---|---|
| International approval standards | UL | UL 508<br>CSA C 22.2 No.14 | E 96090 |
| | TÜV | EN 60947-5-1 | R 2-50006349 |
| Domestic compliant standards | – | JIS C 8201-5-1<br>IEC 60947-5-1 | – |

| Options | | |
|---|---|---|
| High temperature and high oil resistance + low current load typeNote 1<br>**KV** | Without cover<br>Note 2<br>**N** | Without cover + low current load type<br>**KN** |
| **SL1-AKV** | **SL1-AN** | **SL1-AKN** |
| **–** | **–** | **SL1-BKN** |
| **–** | **SL1-DN** | **SL1-DSKN** |
| **–** | **SL1-EN** | **–** |
| **–** | **SL1-HN** | **SL1-HKN** |
| **SL1-PKV** | **SL1-PN** | **–** |

## PERFORMANCE

| Item | | Details |
|---|---|---|
| External standards | Conformed standards | JIS C 8201-5-1/IEC 60947-5-1 |
| | Approval standards | UL 508/CSA C 22.2 No.14/IEC 60947-5-1<br>Except high oil and heat resistant type |
| Structure | Contact type | Single-Pole Double-Throw (SPDT) (Refer to contact type in figure below.) |
| | Contact shape | Standard load type: Pure silver rivet |
| | | Low current load type: Gold-plated silver, rivet |
| | Terminal shape | M3 screw and connector |
| | Protective structure | IP67 (IEC 60529) |
| | Operating environment pollution level | 3 |
| Electrical performance | Electrical rating | See Table 1 |
| | Rated frequency | 45 to 65Hz and d.c. |
| | Insulation resistance | Between non-continuous terminals: 100MΩ.<br>Between each terminal and non-conducting metal part: 100MΩ. |
| | Rated insulation resistance (Ui) | 250V<br>Dielectric strength between each terminal and non-conducting metal part:<br>2,000Vac (50 to 60Hz, 5s, leak current 1mA) |
| | Dielectric strength between contacts | 1,000Vac (50 to 60Hz, 5s, leak current 1mA) |
| | Rated impulse dielectric strength (Ump) | 2,500V |
| | Switching overcurrent | Category II |
| | Initial contact resistance | Silver contact: 50mΩ max. (6 to 8Vdc, 1A voltage drop method),<br>Gold-plated contact: 100mΩ max. (6 to 8Vdc, 0.1A voltage drop method) |
| | Contact minimum allowable load | Silver contact: 5mA-24Vdc, 10mA-12Vdc<br>Gold-plated contact: 5mA-5Vdc |
| | Rated energizing current (Ith) | Silver contact: 5A<br>Gold-plated contact: 1A<br>(Temperature increase: 65°C max.) |
| | Short-circuit protection mechanism | M10A (IEC 60127) |
| | Conditional rated short-circuit current | 1,000A (power factor 0.5 to 0.7) |
| Mechanical performance | Actuator strength | Withstand load 5 times O.F. (operating direction for 1 minute) |
| | Terminal strength | Withstand tightening strength of 0.6N-m for 1 minute |
| | Impact resistance (malfunction) | 300m/s$^2$, Contact release of 1ms max. at free position and operating limit positions |
| | Vibration resistance (malfunction) | Frequency 10 to 55Hz, 1.5mm peak-to-peak amplitude for 2 continuous hours<br>Contact release of 1ms max. at free position and operating limit positions or operating limit position |
| | Allowable operating speed | 0.02mm/s to 0.5m/s. 0.02mm/s to 0.25m/s on the **SL1-B** Series |
| | Mechanical operating frequency | Max. 120 operations/minute.<br>Max. 60 operations/minute on cold and weather resistant/high oil and heat resistant types. |
| Life | Mechanical life | Min. 20 million operations. Min. 2 million operations on the **SL1-B** Series.<br>Min. 1 million operations on cold and weather resistant type.<br>Min. 2 million operations on high oil resistant heat resistant type.<br>Overtravel (O.T.) is 70 to 100% of standard value. |
| | Electrical life | Standard load type: Min. 2 million operations (125Vac-1A resistive load)<br>Min. 300,000 operations (125Vac-5A, 30Vdc-5A resistive load)<br>Low current load type: Min. 5 million operations (125Vac-0.1A, 48Vdc-0.1A resistive load) |
| Environmental conditions | Operating ambient temperature | Standard type: −10 to +70°C<br>Cold and weather resistant type: −40 to +70°C (other than below)<br>−30 to +70°C on **SL1-B** (freezing not allowed)<br>High oil and heat resistant type: 0 to 120°C |
| | Operating ambient humidity | Max. 98%RH |
| Recommended tightening torque | Body | 1.3 to 1.7N-m (M4 hexagon socket head bolt) |
| | Terminal screw | 0.4 to 0.6N-m (M3 binding head machine screw) |
| | Panel mounting nut | 4 to 6N-m (M14 hexagonal nut) |

Table 1. Electrical rating

| Item | Contact material | JIS/IEC/EN | UL/CSA |
|---|---|---|---|
| Standard load type | Silver | AC-15: 3A-250V<br>AC-12: 5A-250V<br>DC-12: 2A-48V | 5A-250Vac General Use Load<br>5A-30Vdc |
| Low current load type | Gold-plated | AC-12: 0.1A-125V<br>DC-12: 0.1A-48V | 0.1A-125Vac General Use Load<br>0.1A-30Vdc |

● Reference rating (Ratings fluctuate according to the operating environment and type of load. Check values on an actual operating unit.)

• Standard load model: Silver contact

| AC rating | 125Vac | | | | 250Vac | | | |
|---|---|---|---|---|---|---|---|---|
| | Resistance | Induction | Electric motor | | Resistance | Induction | Electric motor | |
| | | | N.C. | N.O. | | | N.C. | N.O. |
| Current (A) | 5 | 3 | 1 | 2 | 5 | 3 | 0.5 | 1 |

| DC rating | 8Vdc | | 14Vdc | | 30Vdc | | 115Vdc | | 230Vdc | |
|---|---|---|---|---|---|---|---|---|---|---|
| | Resistance | Induction | Resistance | Induction | Resistance | Induction | Resistance | Induction | Resistance | Induction |
| Current (A) | 5 | 3 | 5 | 3 | 5 | 3 | 0.5 | 0.1 | 0.25 | 0.05 |

• Low current load type: Gold-plated contact

| AC rating | 115Vac | |
|---|---|---|
| | Resistance | Induction |
| Current (A) | 0.1 | – |

| DC rating | 8Vdc | | 14Vdc | | 30Vdc | |
|---|---|---|---|---|---|---|
| | Resistance | Induction | Resistance | Induction | Resistance | Induction |
| Current (A) | 0.1 | – | 0.1 | – | 0.1 | – |

Note: ''Inductive load'' refers to a load having a power factor of 0.4 and time constant 7ms (DC). ''Electric motor load'' refers to a load having an inrush current value of six times.

## CONTACT TYPE

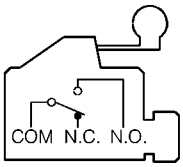


Roller lever type

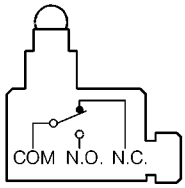


Roller plunger type

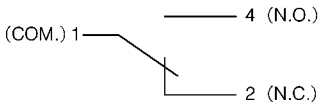


(EN60947 – 5 – 1)

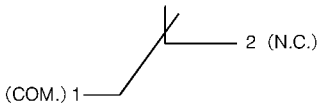


(EN60947 – 5 – 1)

## AUXILARY PARTS

| Name | Appearance | Specifications | Catalog listing |
|---|---|---|---|
| **PA5** Series connector cover | 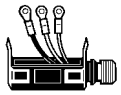 | For DC type, 3 leads | **SL1-PA5I3** |
| Terminal cover one set | 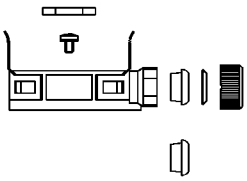 | Cover, panel mounting nuts (2), cap nut, washer and seals (for 5.8 to 7.8dia. cord and for 7.9 to 9.6dia. cord) | **SL1-PA12** |
| Seal |  | Seal for 7.9 to 9.6dia. cord:<br>For standard type, material - NBR containing PVC, and 10 pieces per set | **SL1-PA22** |
| | | Seal for 7.9 to 9.6dia. cord:<br>For cold and weather resistant type, material - fluorosilicone rubber, and 10 pieces per set | **SL1-PA23** |
| | | Seal for 7.9 to 9.6dia. cord:<br>For high temperature and high oil resistant type, material - fluorocarbon rubber, and 10 pieces per unit | **SL1-PA24** |

● Connector for **SL1** Series

The **SL1** Series can be modified into a connector type by assembling **SL1-PA513** below parts onto the **SL1** switch body.

At this time, either replace the terminal cover of the **SL1** standard type switch with the seal connector with cord, or assemble the terminal cover-less type switch.

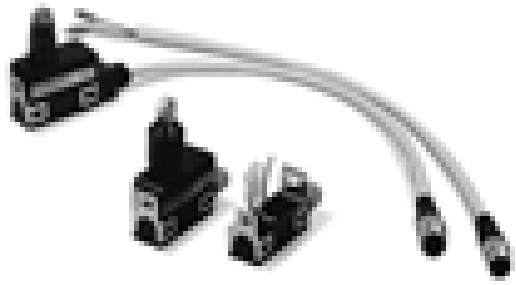

• Assembly method

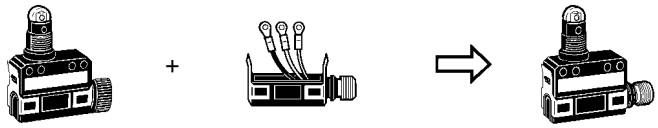

**SL1** body catalog listing appended with N

Connector cover Catalog listing **SL1-PA513**

Connector type **SL1**

• Wiring diagrams

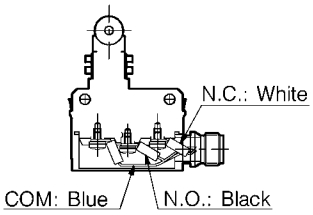


For DC

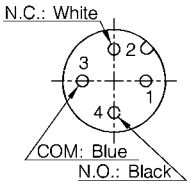


External dimensions

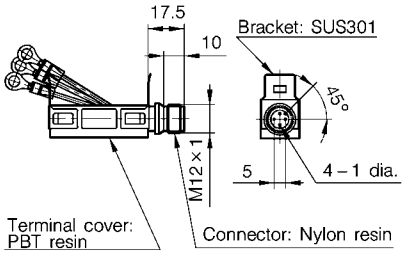

● Electrical life characteristics

• Normal load type

- In case of AC contact voltage

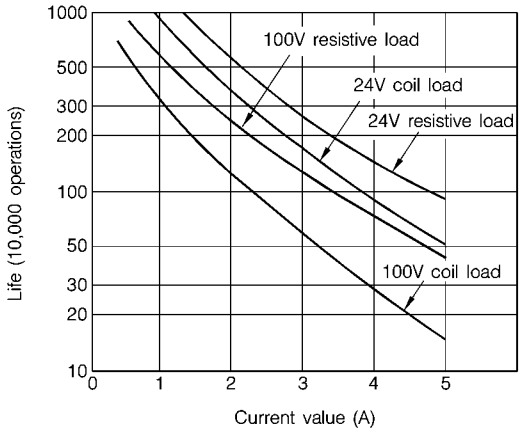


- In case of DC contact voltage

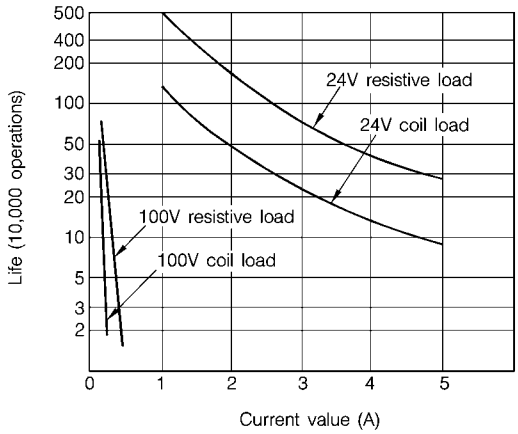


• Low current load type

- In case of AC contact voltage

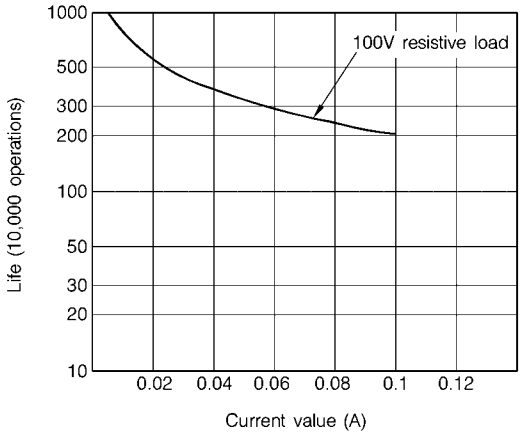


- In case of DC contact voltage

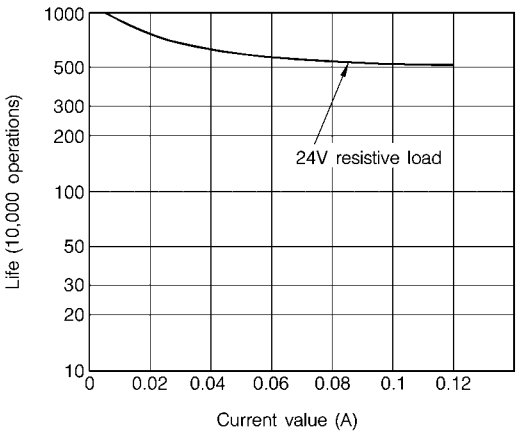


## STRUCTURE DIAGRAMS

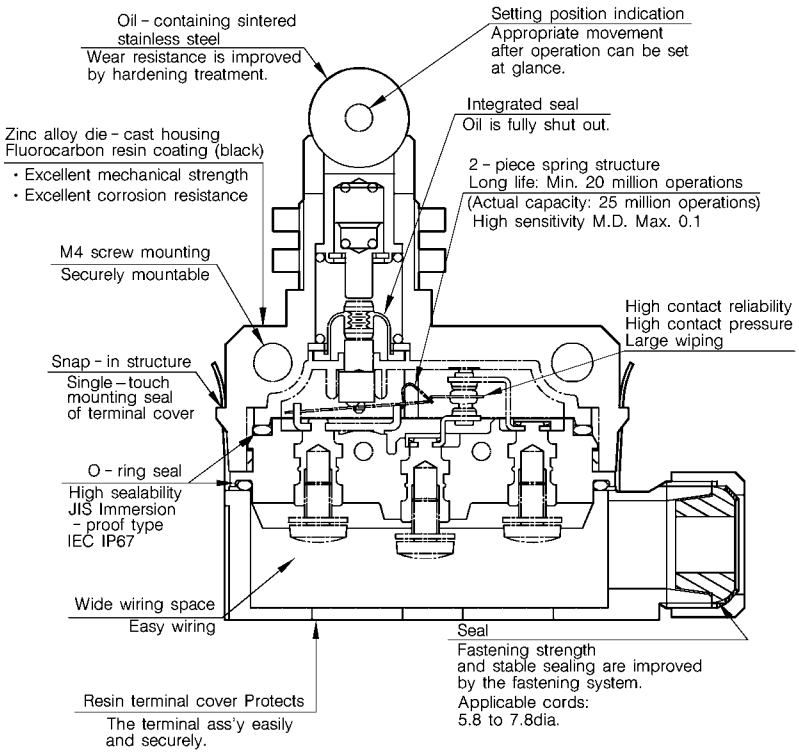


Roller plunger type

## APPEARANCE, OPERATING CHARACTERISTICS AND EXTERNAL DIMENSIONS

(unit: mm)

### Roller plunger type

| Catalog listing | SL1-A□□ |
|---|---|
| Operating force O.F. (N max.) | 11.8 |
| Release force R.F. (N min.) | 4.9 |
| Pretravel P.T. (mm max.) | 1.5 |
| Overtravel O.T. (mm min.) | 3 |
| Movement differential M.D. (mm max.) | 0.1 |
| Operating position R.P. (mm) | 31.4 ±0.8 |

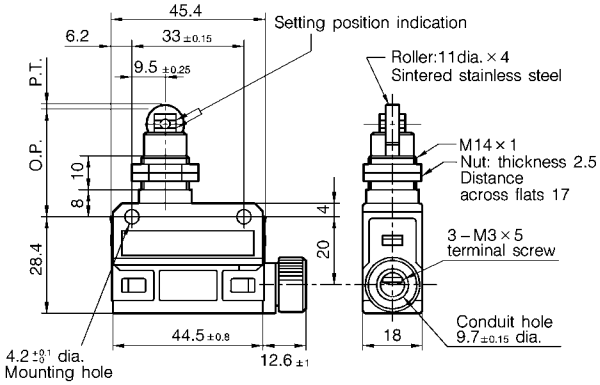


### Boot seal roller plunger type

| Catalog listing | SL1-B□□ |
|---|---|
| Operating force O.F. (N max.) | 11.8 |
| Release force R.F. (N min.) | 4.9 |
| Pretravel P.T. (mm max.) | 1.5 |
| Overtravel O.T. (mm min.) | 3 |
| Movement differential M.D. (mm max.) | 0.1 |
| Operating position R.P. (mm) | 41.4 ±0.8 |

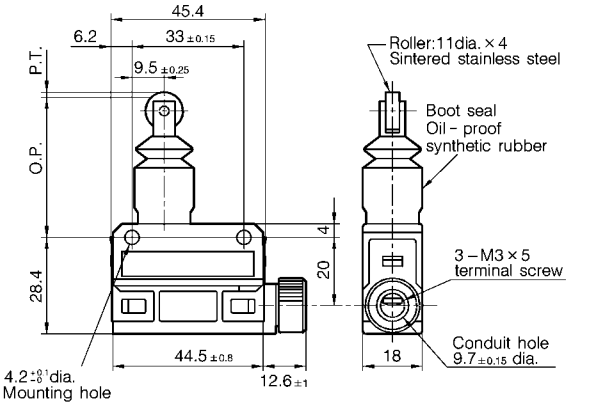


### Cross roller plunger type

| Catalog listing | SL1-D□□ |
|---|---|
| Operating force O.F. (N max.) | 11.8 |
| Release force R.F. (N min.) | 4.9 |
| Pretravel P.T. (mm max.) | 1.5 |
| Overtravel O.T. (mm min.) | 3 |
| Movement differential M.D. (mm max.) | 0.1 |
| Operating position R.P. (mm) | 31.4 ±0.8 |

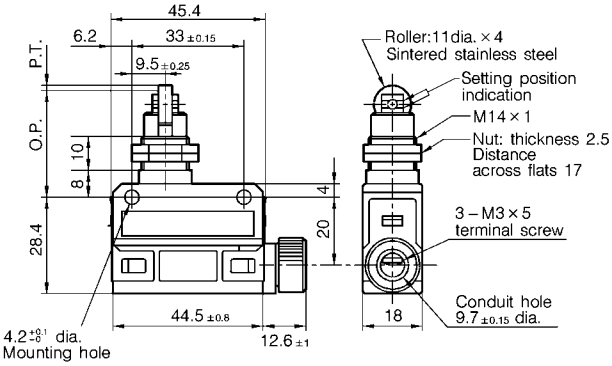


### Long roller plunger type

| Catalog listing | SL1-E□□ |
|---|---|
| Operating force O.F. (N max.) | 11.8 |
| Release force R.F. (N min.) | 4.9 |
| Pretravel P.T. (mm max.) | 1.5 |
| Overtravel O.T. (mm min.) | 3 |
| Movement differential M.D. (mm max.) | 0.1 |
| Operating position R.P. (mm) | 41.4 ±0.8 |

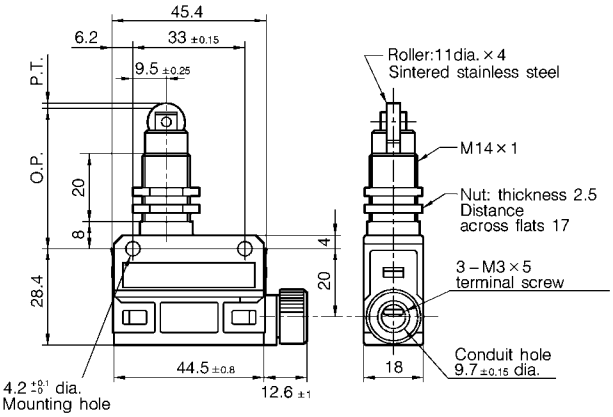

(unit: mm)

## Plunger type

| Catalog listing | SL1-H□□ |
|---|---|
| Operating force O.F. (N max.) | 11.8 |
| Release force R.F. (N min.) | 4.9 |
| Pretravel P.T. (mm max.) | 1.5 |
| Overtravel O.T. (mm min.) | 3 |
| Movement differential M.D. (mm max.) | 0.1 |
| Operating position R.P. (mm) | $25.4^{\pm 0.8}$ |

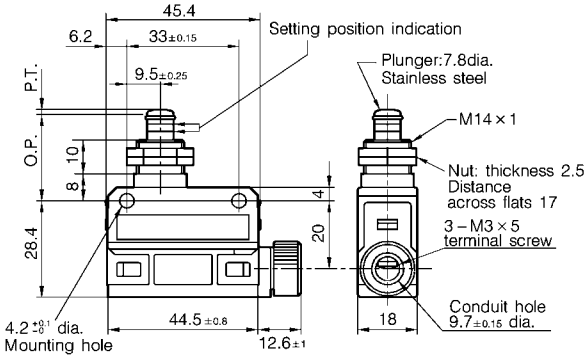


## Short roller lever type

| Catalog listing | SL1-P□□ |
|---|---|
| Operating force O.F. (N max.) | 4.0 |
| Release force R.F. (N min.) | 0.78 |
| Pretravel P.T. (mm max.) | 2 |
| Overtravel O.T. (mm min.) | 4 |
| Movement differential M.D. (mm max.) | 0.3 |
| Operating position R.P. (mm) | $23.1^{\pm 0.8}$ |

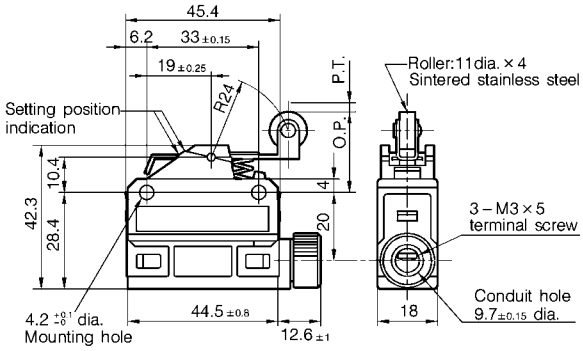

## PRECAUTIONS UPON USE

### ● Profiling lead wire tips

• Profile the lead wire tip as illustrated below, and use a round crimp-type terminal lug having an M3 insulation sleeve. A bare crimp-type terminal lug will cause a short-circuit failure. If a bare crimp-type terminal lug is used due to unavoidable circumstances, insulate it with a mark tube or the like, or assemble the terminal in the opposite direction for the purpose of preventing a short-circuit failure.

### Lead wire connection direction and recommendable cutting sizes

• In case of 3-core

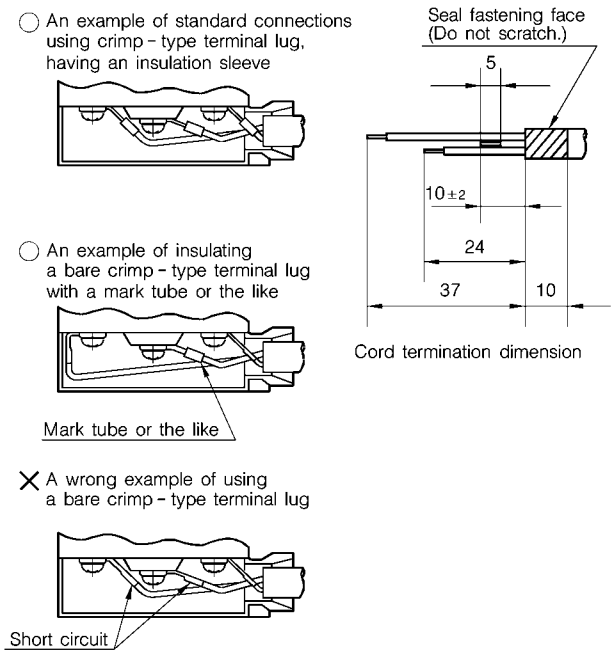


• In case of 2-core (unit: mm)

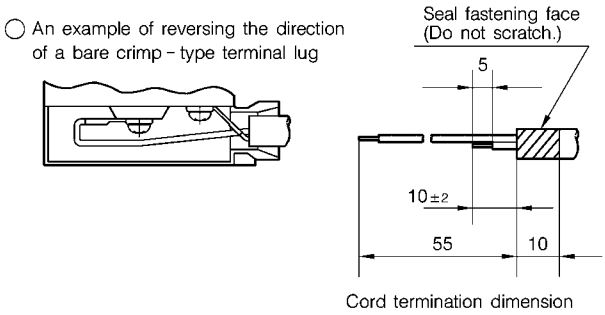


### ● Wiring

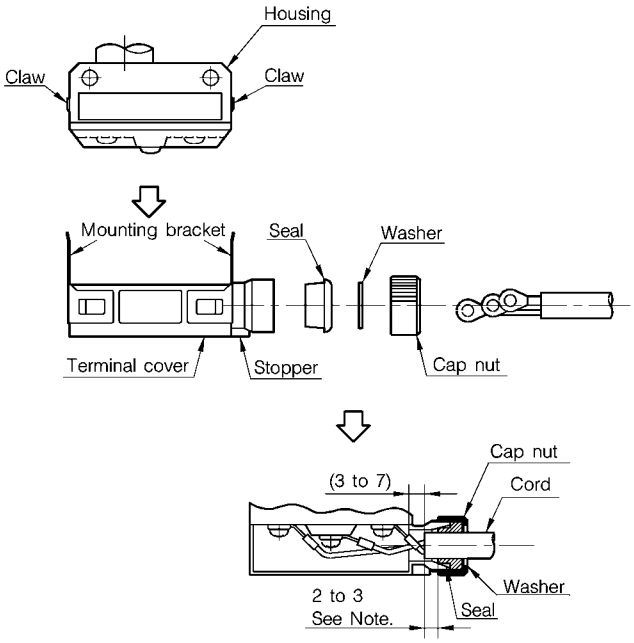


Note: Assemble these components so that the cord sheath is 2 to 3mm protruded from the seal end face.

• Assemble the cord in the order of cap nut, washer, seal and terminal cover.
• Make sure that the mounting bracket of the terminal cover is held by the claws of the housing in this snap-in structure. Then tighten with the cap nut.
• To remove the terminal cover, release the snap-in structure by expanding the mounting bracket on one side by using a minus screwdriver.
• A cord can be drawn out rightward or leftward by changing the mounting direction of the terminal cover.
• Be careful since the layout of terminals is different between the (roller) lever type and (roller) plunger type as illustrated below.

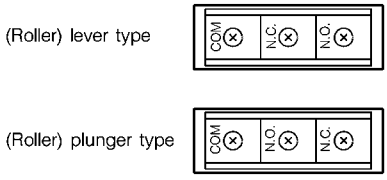


• A seal of an applicable cord diameter of 5.8 to 7.8 is assembled to the terminal cover at the delivery time. When a cord of a diameter other than 5.8 to 7.8mmdia. is used, use a replacement seal **SL1-PA22, SL1-PA23** or **SL1-PA24** (sold separately). To secure sealability, be sure to use a seal meating with the diameter of cord. If a question arises, please contact your nearest Yamatake's sales agent.

## RESTRICIONS ON USE

This product has been designed, developed and manufactured for general-purpose application in machinery and equipment. Accordingly, when used in applications outlined below, special care should be taken to implement a fail-safe and/or redundant design concept as well as a periodic maintenance program.

- Safety devices for plant worker protection
- Start/stop control devices for transportation and material handling machines
- Aeronautical/aerospace machines
- Control devices for nuclear reactors

Never use this product in applications where human safety may be put at risk.

YAMATAKE

*Specifications are subject to change without notice.*


Yamatake Corporation

**Advanced Automation Company**

**International Business Headquarters**

Totate International Building
2-12-19 Shibuya Shibuya-ku
Tokyo 150-8316 Japan
URL:http://www.yamatake.com





This has been printed on 100% recycled paper.

(01)

Printed in Japan (SP)
1st Edition: Issued in Apr., 2002
2nd Edition: Issued in Oct., 2003