Data Sheet

Itemnumber....: 3222001409

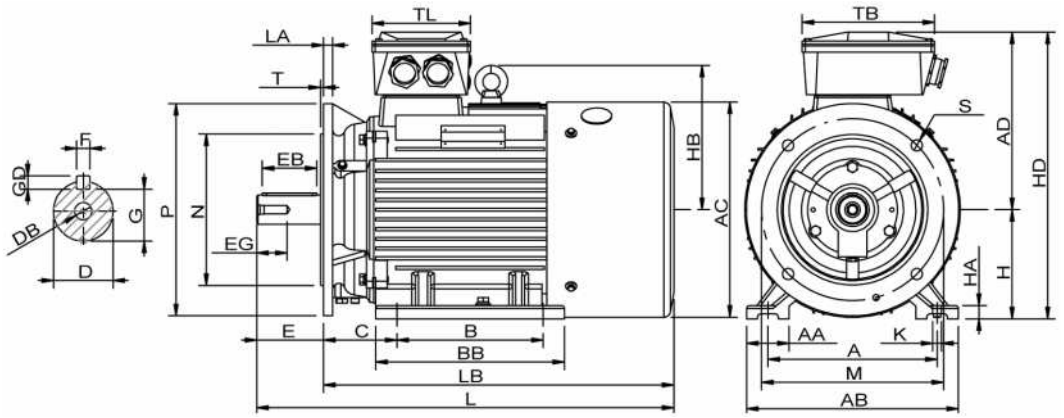

A = 318	**AC = 397**	**BB = 369**	**DB = M20**	**EG = 50**	**GD = 10**	**HB = 263**	**L = 779**	**M = 350**	**S = 4-Ø18.5 TL = 192**
AA = 70	**AD = 313**	**C = 133**	**E = 110**	**F = 16**	**H = 200**	**HD = 513**	**LA = 17**	**N = 300**	**T = 5**
AB = 388	**B = 305**	**D = 55**	**EB = 90**	**G = 49**	**HA = 25**	**K = 18,50**	**LB = 669**	**P = 400**	**TB = 260**

Version
Type.....: HMC2 200L2-2
Design.....: Induction motor
Standard series.....: IEC 60034
Phase / Voltage range.....: 3~ / Low

Electrical design
Efficiency.....: IE2
Pole.....: 2
Power at 50 Hz (kW).....: 37,0
Hz.....: 60 (60 Hz output)
Voltage.....: 440VD 60 Hz
Winding voltage.....: 400VD/690VY 50 Hz
Power output (kW).....: 43,0
Duty.....: S1
Insulation class.....: F
Temperature rise.....: B

Motor protection
Thermal protection main....: PTC 3x 155 dgr
Thermal protection second..: None
Space heater.....: 1x 230V
Temperature detector.....: No
SPM.....: No
IR wire.....: No
Tropical insulation.....: Yes

Explosion protection
According to.....: None

General
Direction of rotation.....: CW
Painting.....: RAL 9005 Gloss 10
Nameplate.....: Multivoltage + VFD
Special packing.....: No
Special requirements.....: No

Mechanical design
Frame size.....: 200
Mounting.....: B35
Rain cap.....: No
Protection class.....: IP55
Cooling method.....: IC411/TEFC
External grounding.....: Yes
Drain hole.....: Yes
Frame material.....: Cast Iron
Material approval.....: None
Shaft.....: IEC Standard
Key.....: Closed key
Balancing.....: Half key balancing
Vibration class.....: Grade-A
Weight (kg).....: 244

Environment condition
Ambient temp. min. (°C)..: -20
Ambient temp. max. (°C)..: 45
Altitude (mtr up to).....: 1000

Bearing
DE Bearing.....: 6312-ZZ/C3
NDE Bearing.....: 6312-ZZ/C3
Fixed bearing.....: DE

Terminal box
Tbox position.....: Top
Cable entry direction.....: Right (from DE)
Cable entry
Main.....: 2 x M50x1,5
Ø32-38mm metal
Accessory.....: 2 x M20x1,5
Metal blindcaps
Connection type.....: Delta (D)
Terminal board thread.....: 6-M8

Test values
Rotor inertia (kgm²).....: 0,16
Noise level (dB(A)).....: 75
No load current (A).....: 17,2
Winding resist. (ohm).....: 0,11
Starting time (sec.).....: 0,14
Temp. rise winding (K).....: 77
Temp. rise surface (K).....: 65

Rated power (kW) . . . . . :	37,0	36,0	44,5	43,0
Frequency (Hz) . . . . . :	50	50	60	60
Voltage (V) . . . . . :	400 690	380 660	480 830	440
Connection . . . . . :	D Y	D Y	D Y	D
Full load current (A) . . . :	64,0 37,0	66,0 38,0	64,0 37,0	67,5
Speed (rpm) . . . . . :	2950	2950	3540	3540
Power factor cos(phi) . . . :	0,91	0,91	0,91	0,91
Efficiency, 100/75/50 (%) :	92,4/92,5/91,4	92,4/92,5/91,4	92,4/92,5/91,4	92,0/92,1/90,9
Ist/In . . . . . :	8,5	7,5	8,5	7,8
Full load torque (Nm) . . . :	120	116	120	116
Tst/Tn . . . . . :	3,1	2,9	3,1	2,7
Tmax /Tn . . . . . :	3,9	3,6	3,9	3,4
Duty . . . . . :	S1	S1	S1	S1
Ambient temp. (°C) . . . . . :	40	45	40	45

Data are not binding. Hoyer reserves the right to implement changes without notice. The extent of data are not equivalent to nameplate on the motors.