VALORI DI INTERVENTO INTERVENTION VALUES	mbar	mm c.a.
Δp INTERVENTO (C - NO) Δp INTERVENTION	$130^{\pm 13}$	$1295^{\pm 133}$
Δp RILASCIO (C - NC) Δp RELEASE	$98^{\pm 13}$	$1000^{\pm 133}$

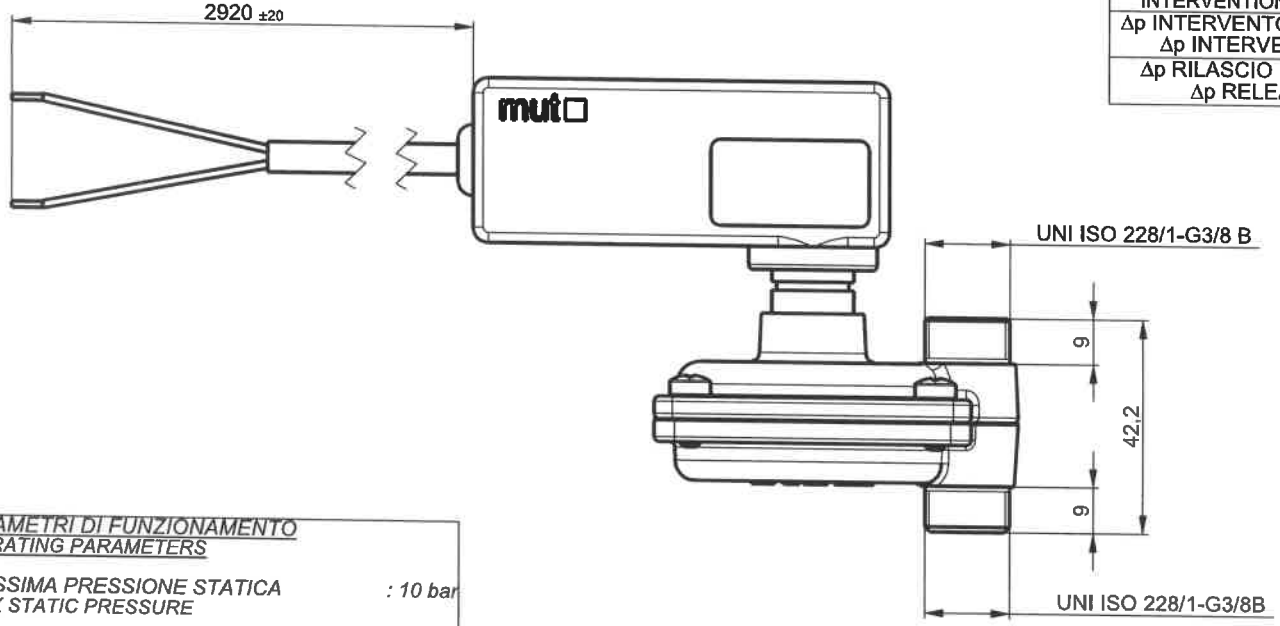

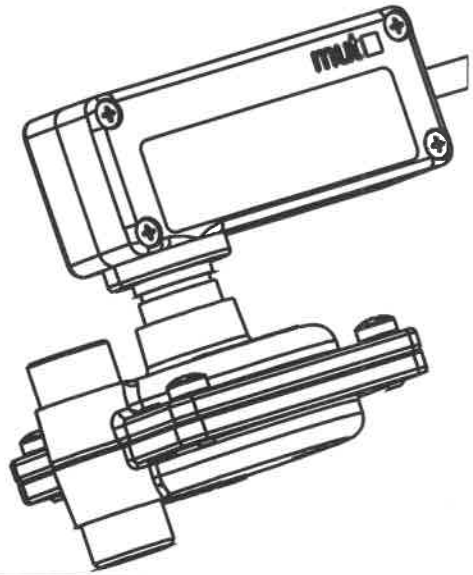

PARAMETRI DI FUNZIONAMENTO
OPERATING PARAMETERS

- *MASSIMA PRESSIONE STATICA* *: 10 bar*
  MAX STATIC PRESSURE
- *MASSIMA TEMPERATURA FLUIDO* *: 95°C*
  MAXIMUM FLUID TEMPERATURE
- *MINIMA TEMPERATURA FLUIDO* *: 5° C*
  MINIMUM FLUID TEMPERATURE
- *MASSIMA TEMPERARURA AMBIENTE* *: 80° C*
  MAXIMUM ROOM TEMPERATURE
- *IMBALLO MULTIPLO 20Pz*
  MULTIPLE PACKING

MATERIALI
MATERIALS

- *CORPO / COPERCHIO: OTTONE EN 12615:98CW617N*
  BODY & COVER: BRASS
- *PIATTELLO: NORYL*
  CAP: NORYL
- *MEMBRANA: EPDM*
  DIAPHRAGM :EPDM
- *MOLLE: ACCIAIO INOX*
  SPRINGS : STAINLESS STEEL
- *MICROINTERRUTTORE: 10A-250 VAC ATTACCHI FASTON 6.3 mm*
  MICROSWITCH : 10A-250 VAC ATTACCHI FASTON 6.3 mm
- *SCATOLA IP40 MICRO: NYLON AUTOESTINGUENTE*
  MICROSWITCH IP40 BOX : GLASS REIFORCED NYLON

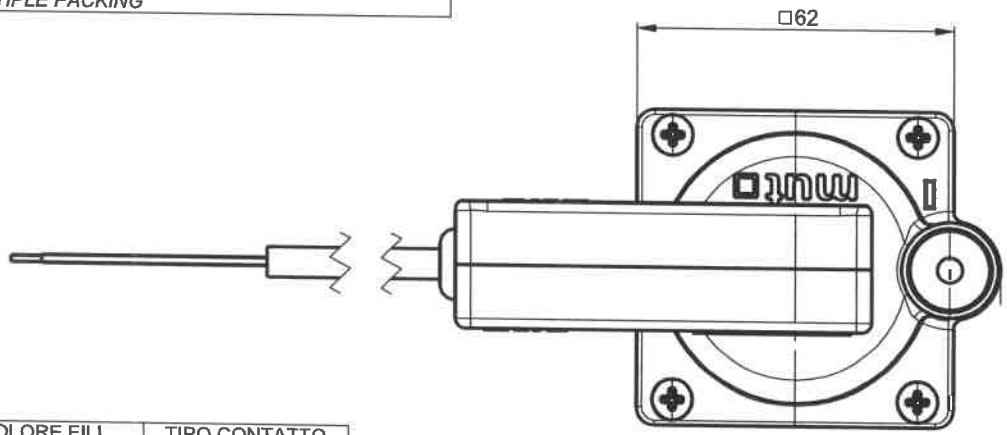

COLORE FILI WIRW COLORS	TIPO CONTATTO TYPE CONTACT
BLU/BLUE	COM
MARRONE/BROWN	NO
/	/

COD.ARTICOLO CLENTE : 7047263

MODIFICHE
ALTERATIONS

SCALA SCALE	1:5	VALORI ANGOLARI ANGULAR VALUES			±30'			MATARIALE / MATERIAL	DISEGN. DRAW	DAL MASO	DATA DATE	19/10/07
TOLLERANZE GENERALI GENERAL TOLERANCES		fino a 3	> 3 a 6	> 6 a 30	> 30 a 120	> 120 a 400	> 400 a 1000		CONTR. CHECK		DATA DATE	
	PLASTICA PLASTIC	±0.15	±0.17	±0.25	±0.4	±1	±2.5					
	METALLO METAL	±0.05	±0.05	±0.1	±0.15	±0.2	±0.3	TRATT. TERMICO E/O SUPERF. HEAT/SUPERFICIAL TREATMENT	CORRISPONDE A/CORRESPONDS TO			
	METALLO METAL	±0.1	±0.1	±0.2	±0.3	±0.5	±0.8		SOSTITUISCE IL/SUBSTITUTES			
	METALLO METAL X	±0.2	±0.3	±0.5	±0.8	±1.2	±2		SOSTITUITO DA/SUBSTITUTED BY			

mut meccanica tovo
MONTECCHIO MAGGIORE
36075 (VI) ITALY

SFS 130 M1 IP40 G3/8 (2000226) 20PZ

Refered to law terms, MUT SpA reserves the ownership on this drawing and prohibits to reproduce or communicate it wihout authorization

DISEGNO / DRAWING
7.004.00357-06

DIMENSIONI IN mm
DIMENSIONS IN mm